EMCO ASIS plus Module for WC – build-in model, door tileable tiles & adhesive



Product data

Brand	Emco
Series	ASIS PLUS
Short description	with boxes for WC-paper and spare paper or moist-tissue box and integrated toilet brush set, left-hinged door

Product Configuration — 13 variants across 5 attributes

Size	Color	Door Item	Mounting type
80.3 cm	Aluminum	Left door hinge	Recessed
33.2 cm		Right door hinge	
49.2 cm		Reversible door hinge	
65.8 cm			

Style
Paper guide lateral
No paper guide
Paper feed top

The following pages show, for each size, the **technical drawing**, a **product image** and the complete **article and EAN list**.

EMCO Bad GmbH | +4959191400 | bad@emco.de

80.3 cm

Dimensions: 15,4 × 15 × 80,3 cm

Technical Drawing & Variants

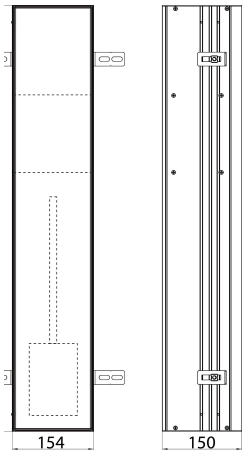

Variants 80.3 cm (4)



975611000

4018445114431

Color	Aluminum
Door Item	Left door hinge
Mounting type	Recessed
Style	Paper guide lateral



975611001

4018445114448

Color	Aluminum
Door Item	Right door hinge
Mounting type	Recessed
Style	Paper guide lateral



975611010

4018445119146

Color	Aluminum
Door Item	Left door hinge
Mounting type	Recessed
Style	Paper feed top



975611011

4018445119153

Color	Aluminum
Door Item	Right door hinge
Mounting type	Recessed
Style	Paper feed top

EMCO Bad GmbH | +4959191400 | bad@emco.de

33.2 cm

Dimensions: 15,4 × 15 × 33,2 cm

Technical Drawing & Variants

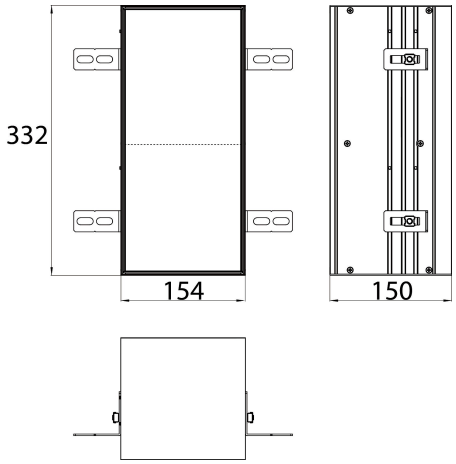

Variants 33.2 cm (2)



975611002

4018445114455

Color	Aluminum
Door Item	Left door hinge
Mounting type	Recessed
Style	Paper guide lateral



975611003

4018445114462

Color	Aluminum
Door Item	Right door hinge
Mounting type	Recessed
Style	Paper guide lateral

EMCO Bad GmbH | +4959191400 | bad@emco.de

49.2 cm

Dimensions: 15,4 × 15 × 49,2 cm

Technical Drawing & Variants

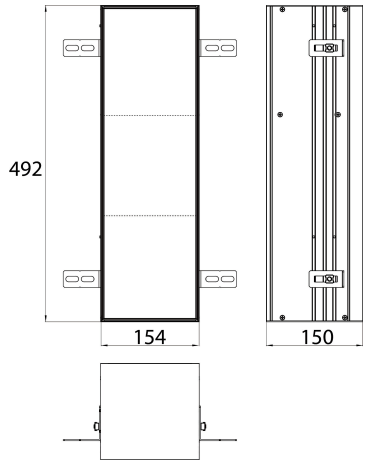

Variants 49.2 cm (3)



975611004

4018445114479

Color	Aluminum
Door Item	Left door hinge
Mounting type	Recessed
Style	Paper guide lateral



975611005

4018445114486

Color	Aluminum
Door Item	Right door hinge
Mounting type	Recessed
Style	Paper guide lateral



975611009

4018445114912

Color	Aluminum
Door Item	Reversible door hinge
Mounting type	Recessed
Style	No paper guide

EMCO Bad GmbH | +4959191400 | bad@emco.de

65.8 cm

Dimensions: 15,4 × 15 × 65,8 cm

Technical Drawing & Variants

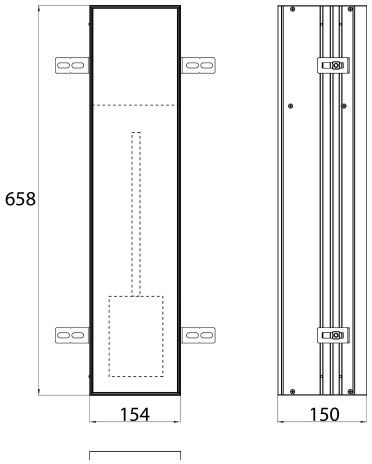

Variants 65.8 cm (4)



975611006
4018445114493

Color	Aluminum
Door Item	Left door hinge
Mounting type	Recessed
Style	Paper guide lateral



975611007
4018445114509

Color	Aluminum
Door Item	Right door hinge
Mounting type	Recessed
Style	Paper guide lateral



975611012
4018445119160

Color	Aluminum
Door Item	Left door hinge
Mounting type	Recessed
Style	Paper feed top



975611013
4018445119177

Color	Aluminum
Door Item	Right door hinge
Mounting type	Recessed
Style	Paper feed top

EMCO Bad GmbH | +4959191400 | bad@emco.de