EMCO LOFT Toilet brush set, glass, brush grip, with spare brush



Product data

Brand	Emco
Series	LOFT
Fastening Type	For screwing
Short description	EMCO LOFT Toilet brush holder for wall mounting with satin-finished glass part and chrome coating – elegant, hygienic and space-saving for every bathroom.

Surfaces — 6 finishes



Chromium



Black brushed



Polished gold



Stainless steel



Brushed bronze



Black

Product Configuration — 6 variants across 1 attributes

Color

Chromium
Black brushed
Polished gold
Stainless steel
Brushed bronze
Black

EMCO Bad GmbH | +4959191400 | bad@emco.de

The following pages show, for each size, the **technical drawing**, a **product image** and the complete **article and EAN list**.

EMCO Bad GmbH | +4959191400 | bad@emco.de

Dimensions 9,1 × 12,1 × 39,1 cm

Technical Drawing & Variants

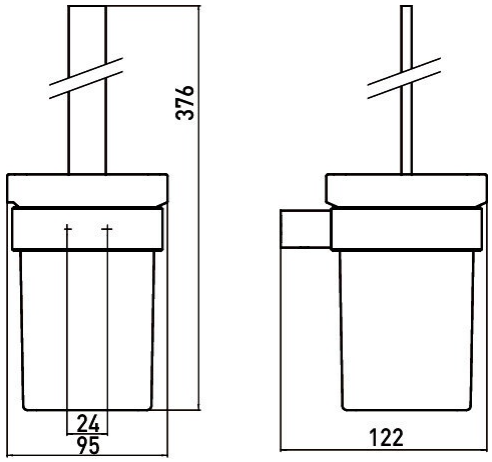

Variants (6)



051500100
4018445078078
Color Chromium



051500500
4018445193054
Color Black brushed



051500700
4018445193078
Color Polished gold



051501600
4018445085090
Color Stainless steel



051501700
4018445193092
Color Brushed bronze



051513300
4018445115681
Color Black

EMCO Bad GmbH | +4959191400 | bad@emco.de